Why Analog IP is The Seed *And Interface IP is The Skin* of the IP SOC world

ANALOG BITS

Milestones in Evolution of Vinification vs SoC Industry

Milestones	Vinification	SoC Industry
Philosophy: Integration of	Traditional: Old World Modern: New World	Analog, Interface, RF Digital, Memory
Science	Controlled Fermentation	Moore's Law
Industrialization	Refrigeration	EDA/Foundry/IP
Downturn-80's	Phylloxera	Global Recession
Disaggregation	Vineyard -> Bottle 1 entity Vineyard,WineMaker,Channel	IDM-> Silicon Fabless, EDA/IP, Fabs

Cross Section of a Wine Grape vs SoC

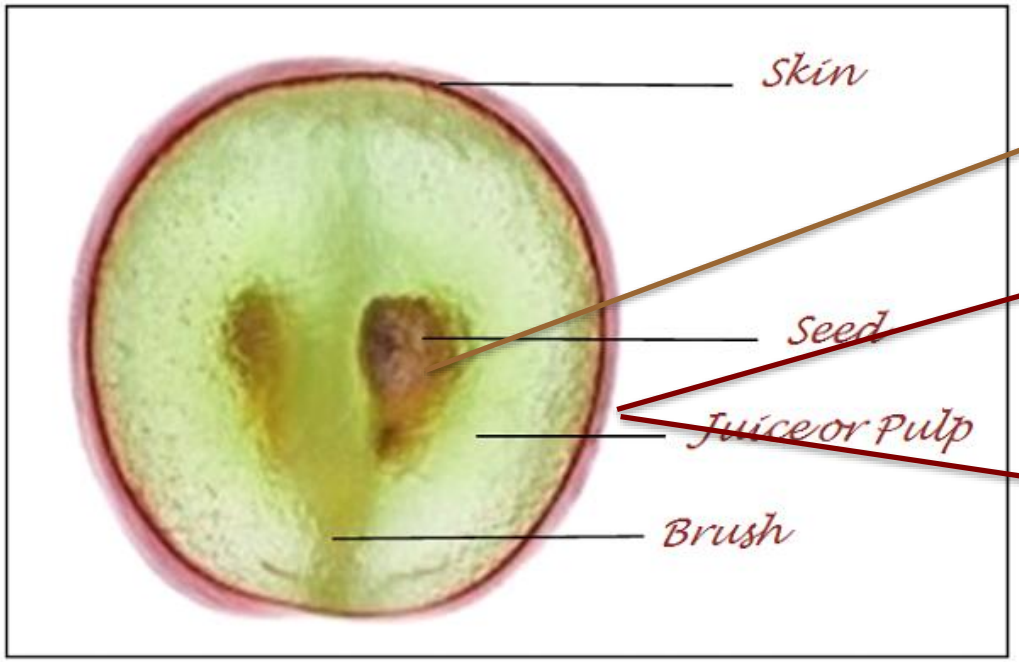

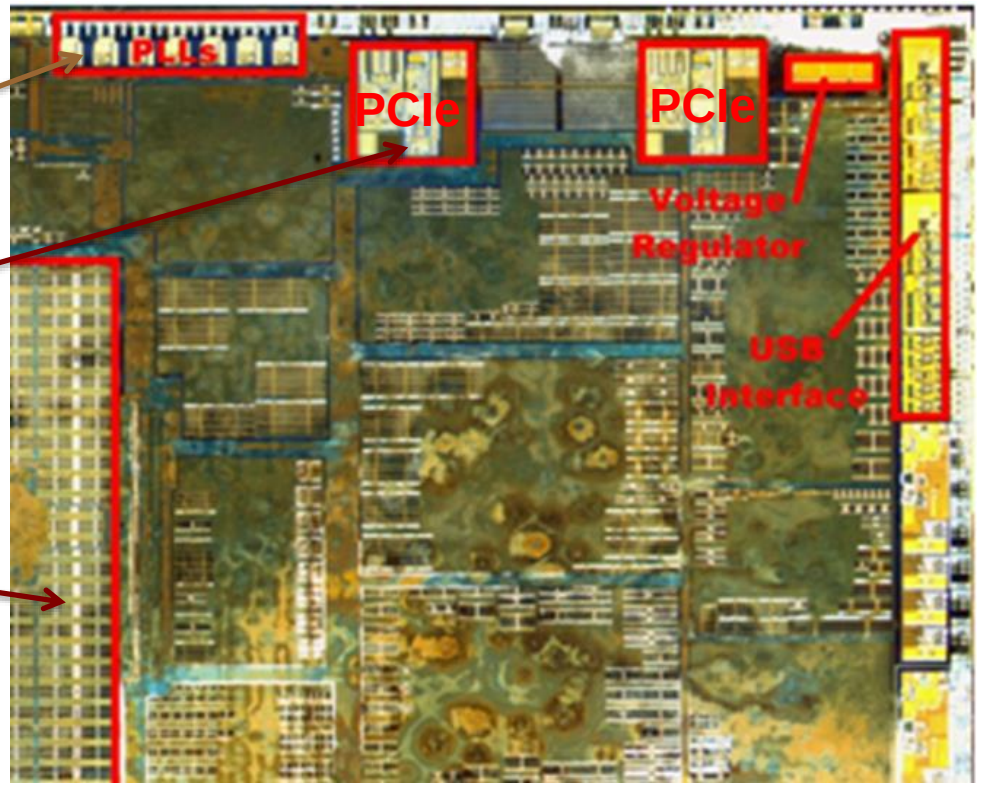

Seed is the Analog Mixed Signal IP

Skin is the Interface IP

Sizes and Compositions of Wine Grapes in a Bottle

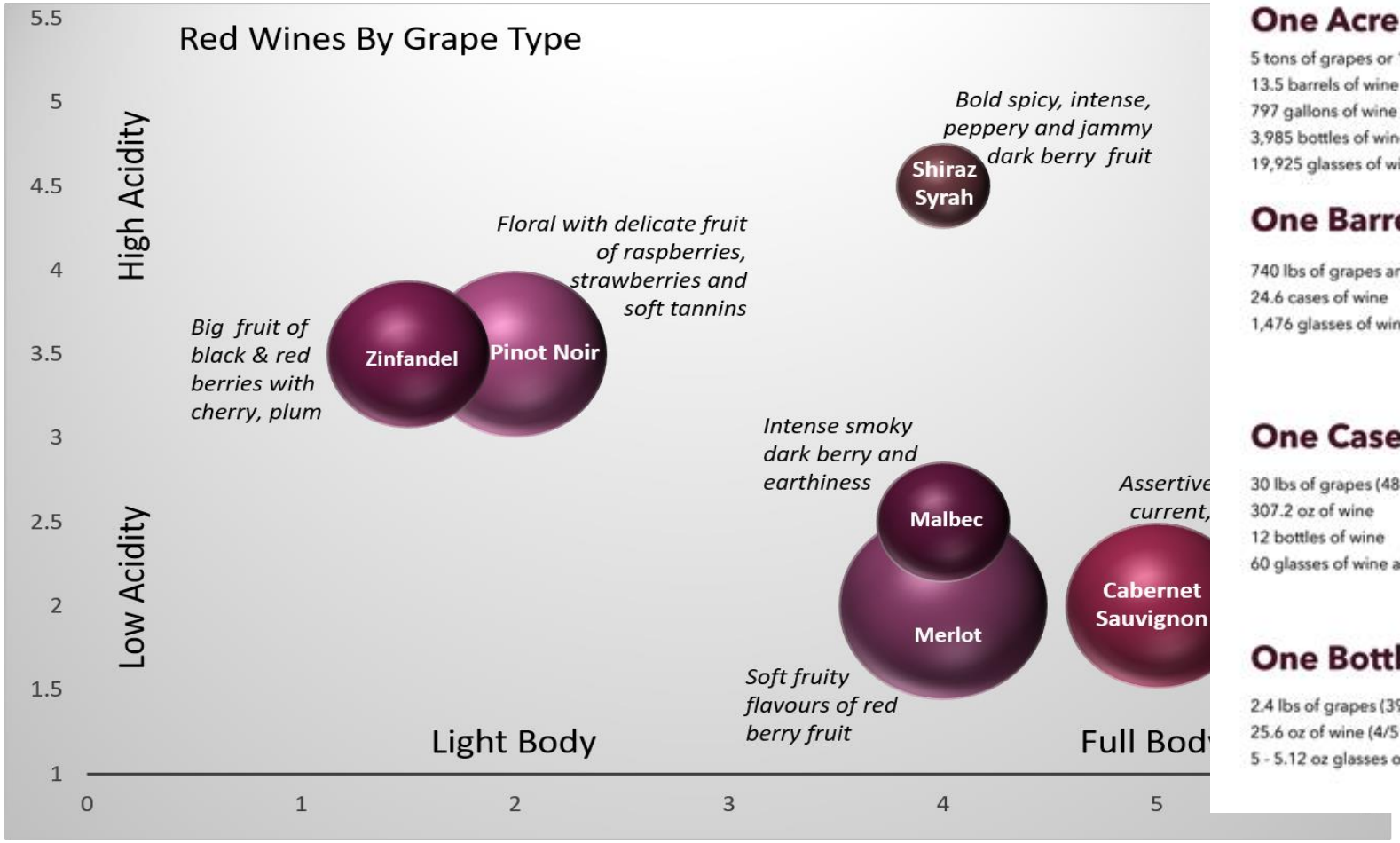

Quiz?

What are the grapes in Red Bordeaux wine?

A. Cabernet sauvignon, pinot noir, cabernet france.

B. Merlot, carmenere, petit verdot and cabernet sauvignon.

C. Merlot, malbec and pinot noir.

D. Merlot, cabernet sauvignon, cabernet franc, petit verdot, carmenere and malbec.

Unparalleled

Sizes and Compositions of SoC's in Various Systems

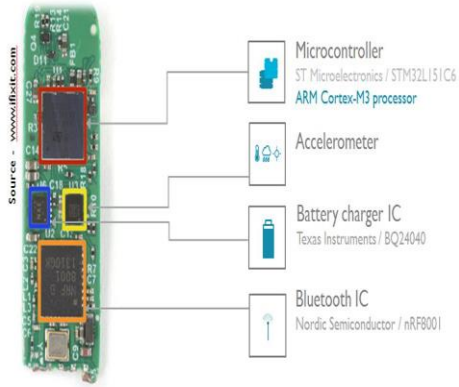

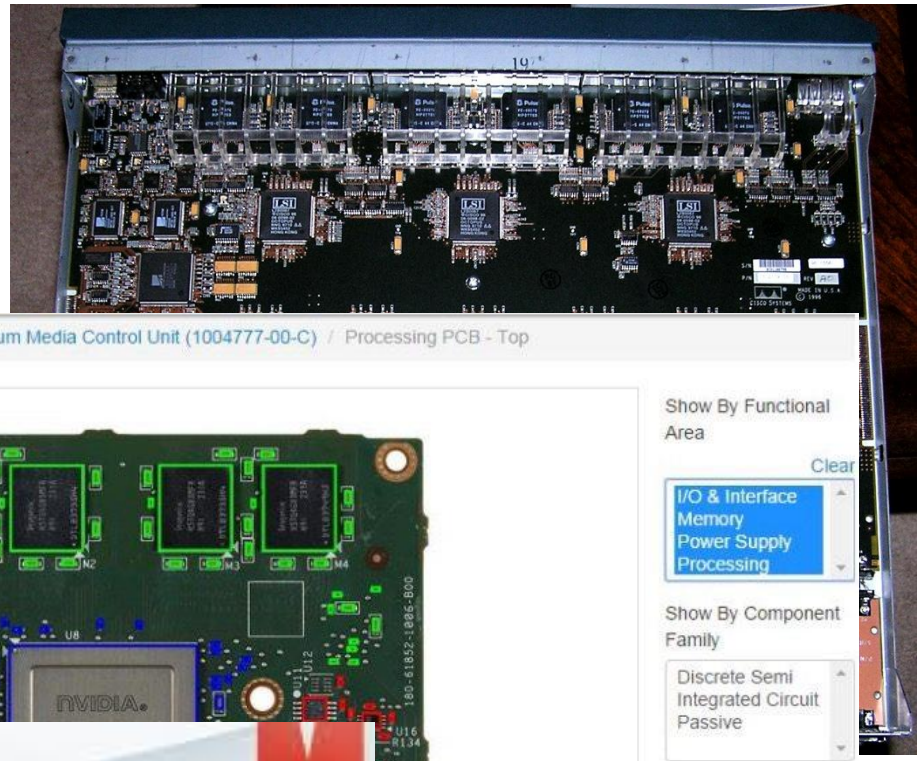

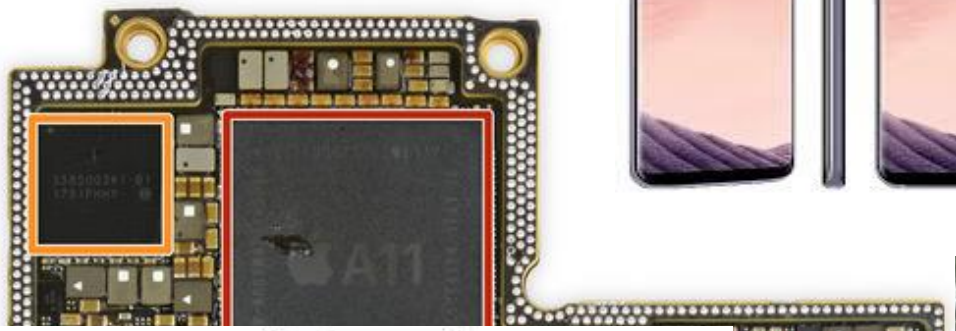

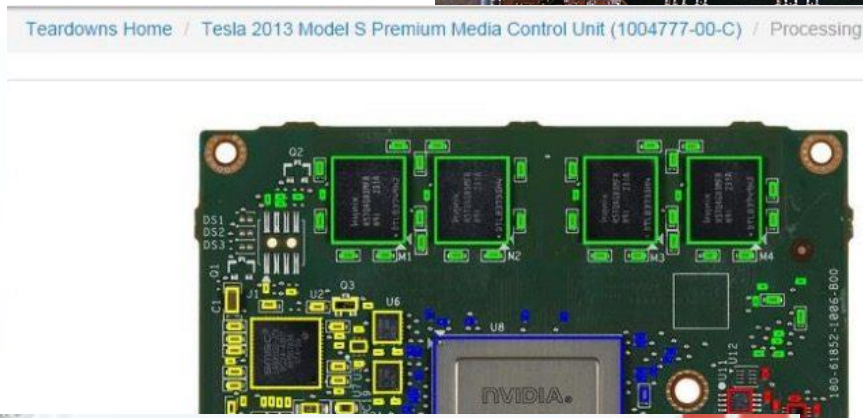

Teardowns Home / Tesla 2013 Model S Premium Media Control Unit (1004777-00-C) / Processing PCB - Top

Show By Functional Area

Clear

I/O & Interface
Memory
Power Supply
Processing

Show By Component Family

Discrete Semi
Integrated Circuit
Passive

Show By Component Type

Analog
Capacitor
Crystal
Diode

Functional Areas

Show all

I/O & Interface
Memory
Power Supply
Processing

Digital: The Old World vs The New World

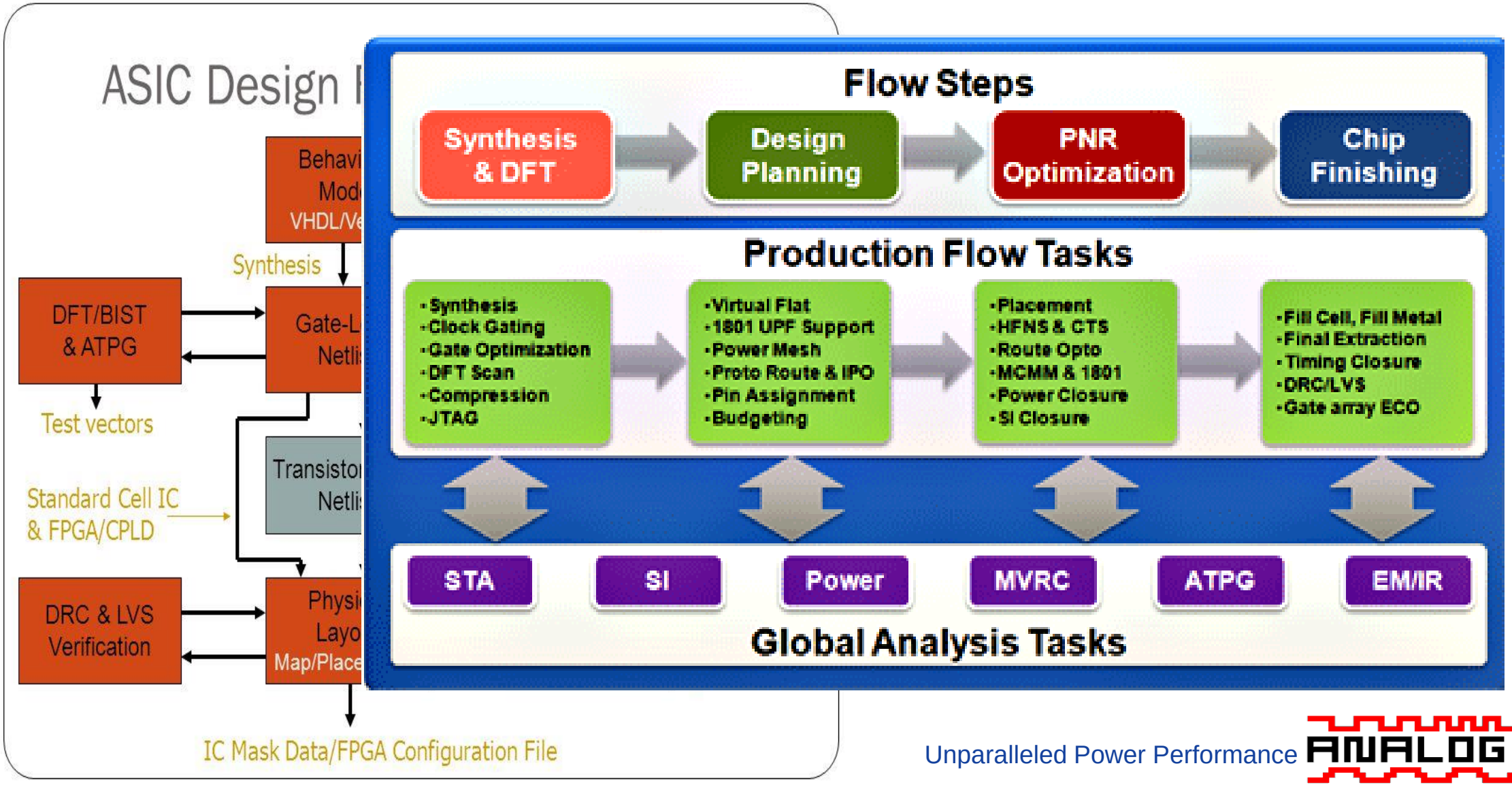

Analog: The Old World vs The New World

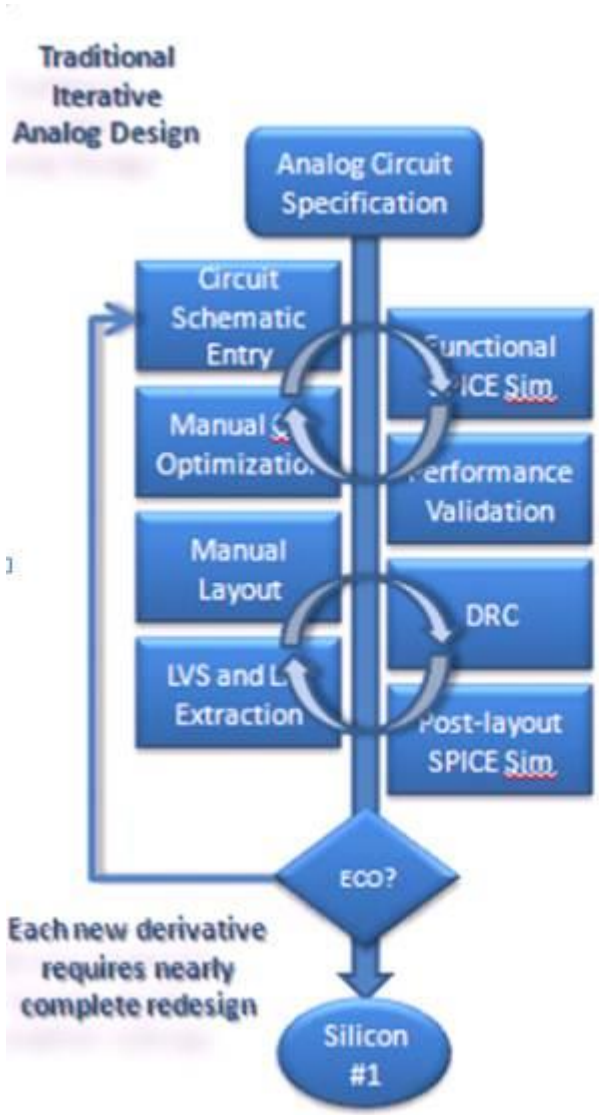

Performance	Accuracy	Capacity	Ease of Use	Full Suite of Analysis
Complex models	Foundry certified	Top-level sim	Drop-in compatible flows	AC, DC, Tran
More parasitics	Silicon correlated device noise	Complex block with LPE	Same netlist/models	Stability
More variability (Corners, Monte Carlo)	nm SPICE to near SPICE	Complex RF (pre/post)	Existing states and measures	Transient Noise
Top level simulations (CDR, PLL, SerDes)			Ease of adoption for new flows (TN, aging)	Driven RF
Device noise (RF, TN)			Robust post-processing	Oscillator RF
			Repeatable Processes	Aging

New Toolbox

Unparalleled Power Performance ANALOG BITS

The FinFet Digital Terroir – Logic and Memory

- 100's of Billions of Transistors
- Defined and prescribed methodology with EDA tools and endorsed by fabs
- Lots of engineers working on RTL
- Even more engineers working on verification
- Lots of EDA tools
- Huge compute and server farms
- Cloud-based computing
- Project managers for every block

The FinFet Analog Terroir – Analog and Interfaces

- Precision and patience
- Start everything from *physics* and *metal* – EM/IR/RC challenges
- Metal first design for high speed SERDES and Clocking
- Parasitic not just due to RC but due to gate resistance in FinFets
- Worry about layout topology and FinFet structures
- Leakage at 150C for automotive applications changes architecture
- Aging of transistors and flicker noise impact on performance

Analog Engineer and Wine Maker – The Eternal Artists

Thinks ***electrons*** all day - uses paper and pens and scientific calculator (1+1 is never2)

Imagines and challenge to solve problems in projects and fights to succeed

Loves physics, geek talks and labs

Circuit Sims, layout checks, EM/IR, IBIS/AMI

Checks every result carefully with relentless patience and decides with 1000's data points

Thinks ***brix*** all day –Soil, Fermentation, Barrels, Bubbling. 1+1 is never 2

Imagination to take a grape to wine and later realize it in winery relentless

Loves chemistry, microbiology and labs

pH, titration, sugar by refractometer, YAN analysis, malic acid

1000's of decisions

Design Life Cycle of s SOC

Turning Sand to Systems with Lots of Passion and Energy

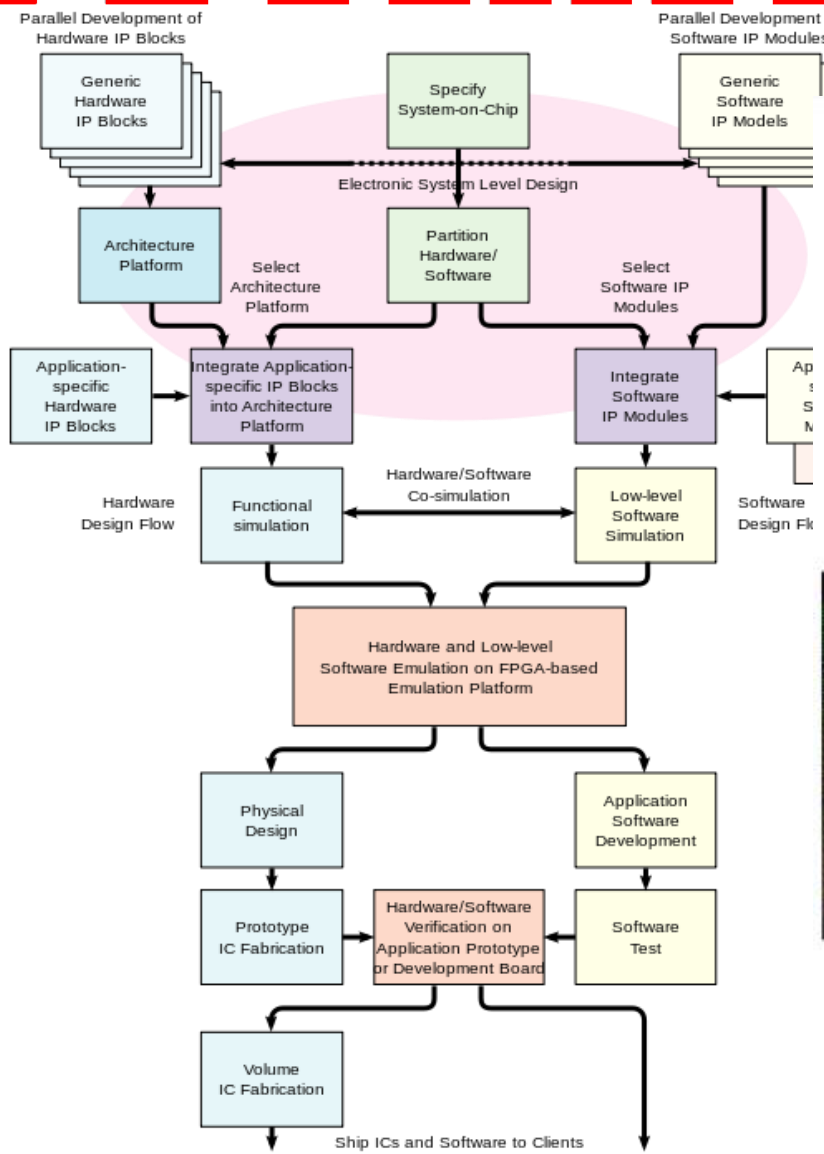

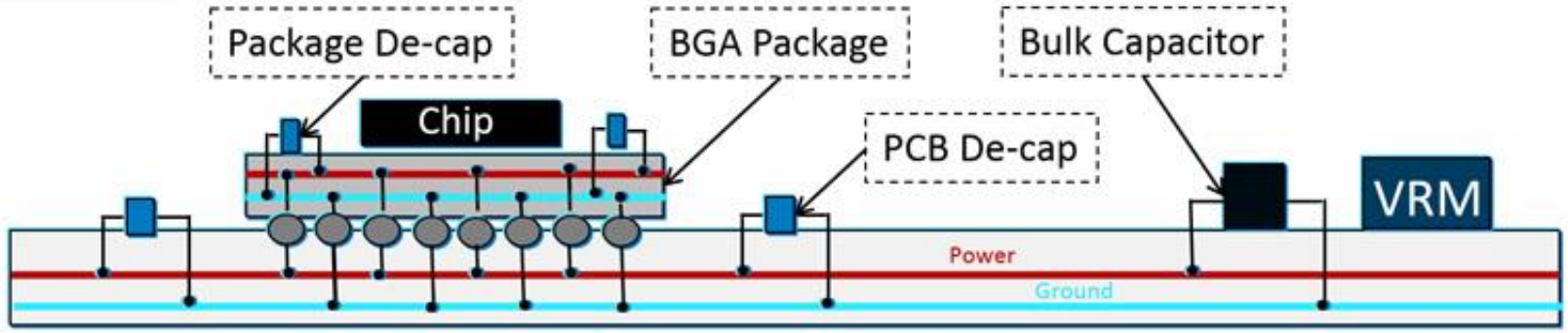

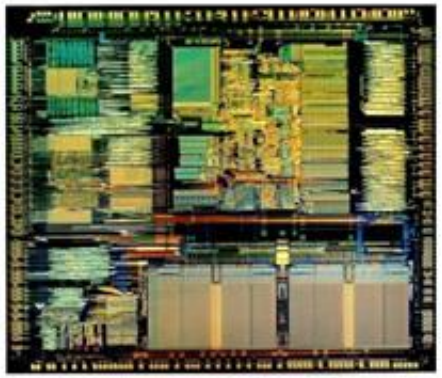

Chip

Package

System

Unparalleled Power Performance

THE LIFE

HOW ONE LITTLE GRAPE

BUD BREAK

The first sign of life.
Buds appear on the vine in spring.

1

FRUIT SET

The fertilized flower produces a seed and forms a green grape berry around the seed to protect it.

3

RIPENING

Winemakers let the grape ripen on the
under the sun, developing delicious su

5

2

VINE FLOWERING

The shoots from which the grapes will eventually grow burst forth with flowers forming on them.

4

VERAISON

The grape turns color from green to either purple or yellow as it ripens in the sunlight.

6

HARV

When the g
perfectly ripe, i

TURNING WATER AND ENERGY INTO WINE

HERE'S A TASTE OF HOW MUCH WATER AND ENERGY IT TAKES TO MAKE WINE, AND HOW SUSTAINABLE PRACTICES CAN DRAMATICALLY REDUCE WINE'S WATER AND ENERGY FOOTPRINT **FOR A BRIGHT AND DELICIOUS FUTURE.**

CHALLENGES IN TRADITIONAL WINEMAKING

IT TAKES **31 GALLONS** OF WATER TO MAKE A SINGLE GLASS OF WINE

MANY OLDER WINERIES WEREN'T DESIGNED WITH WATER AND ENERGY CONSERVATION IN MIND, PLUS THE INFRASTRUCTURE NEEDED FOR LARGE-SCALE MONITORING CAN BE *costly.*

$ $

THE MAJORITY OF WINERIES *don't know* THE AMOUNT OF WATER AND ENERGY IT TAKES TO PRODUCE A GALLON OF WINE.

"When you're thoughtful about making a superior quality wine, it's only natural that you'd do what's best for the Earth."

JIM COLLINS, CHIEF VITICULTURIST FOR FREI BROTHERS RESERVE

E CORK!

finally in our hands.
and enjoy!

What Makes the Perfect Blend

Wine is all about balance, and winemakers look for the **perfect** balance between flavor components like sugar, acid, and tannin.

SOC is about Perfect Amalgamation of Analog and Digital

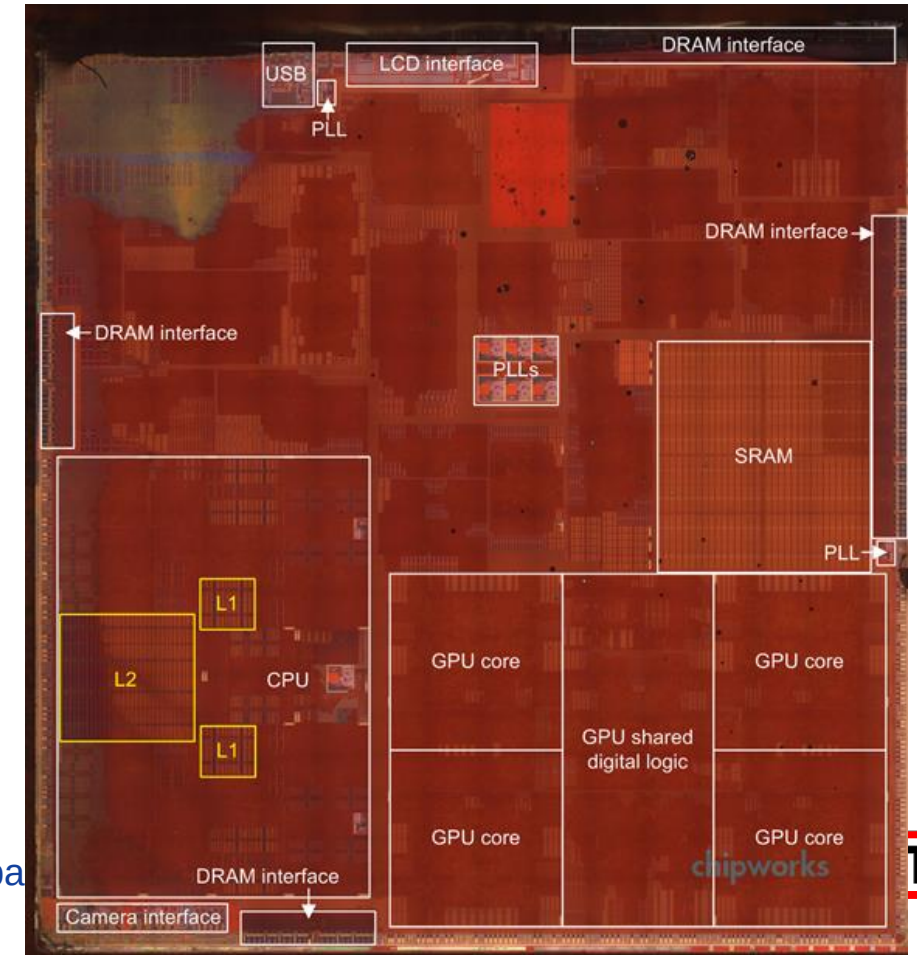

Unpa

For SoC Engineers –the Collaboration and Joy of Changing the World We Live In

- **My parents design SoC's**
- **I get to play on it**
- **Amazon gets to shop with it**